DEL-AIR SYSTEMS

Tech Spec

Item Number

500050

2000 February 3

C1 Inlet

Application

The C1 inlet is used as the fresh air supply in a negative pressure mechanical ventilation system. The C-series inlet is designed to direct air across the ceiling at low ventilation rates (i.e. winter), and drop the air at an approximate 45° angle at high ventilation rates (i.e. summer). This is ideally suited to part slatted swine grower and finisher pens or any application where the air pattern must be changed to match the season. A unique fixed slot opening ensures a minimum airflow

Operation

The automatic spring-return baffle responds to the suction pressure in the room as set by the fans. Spring tension is adjustable with the ratchet slide and hook on the baffle. Once installed, very little ongoing maintenance is required. Each row of inlets will have to be adjusted in situ for uniform, consistent baffle opening in winter and summer. From time to time, minor adjustments may be required as conditions change.

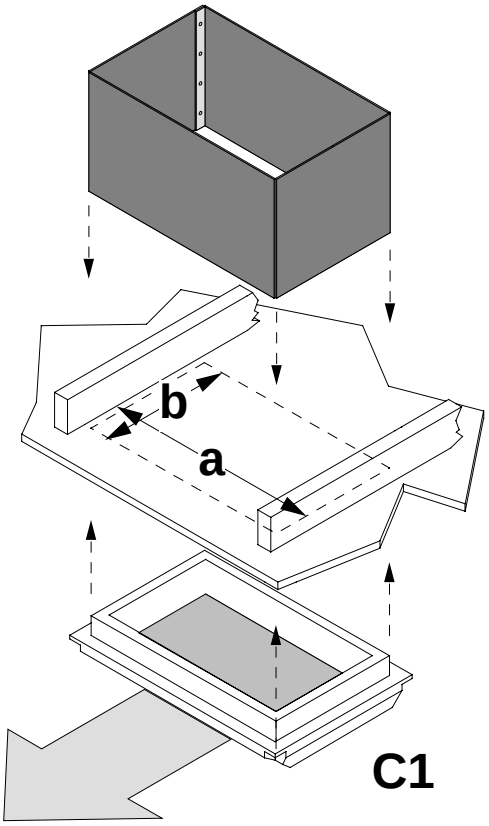

Airflow Data

Static Pressure	CFM
0.0 in H_2O	15*
0.05 in H_2O	425
0.10 in H_2O	1000

Rough Opening

Width	22	in
Length	14	in

Shipping Info

Package of 1

Length	24	in
Width	16	in
Height	5.5	in
Volume	1.2	ft^3
Shipping Weight (	10	lb
	4.5	) kg

☐ Box ☐ Pallet
☒ Shrink Wrap ☐ Other…

Other Info

Airflows determined at lowest spring setting.

* capacity of fixed winter slot.

Each inlet includes a coroplast insulation stop, 13 in high to prevent attic insulation from entering the attic space.

Special Instructions

DEL-AIR SYSTEMS

Tech Spec

Item Number

500051

2000 February 3

C2 Inlet

Application

The C2 inlet is used as the fresh air supply in a negative pressure mechanical ventilation system. The C-series inlet is designed to direct air across the ceiling at low ventilation rates (i.e. winter), and drop the air at an approximate 45° angle at high ventilation rates (i.e. summer). This is ideally suited to part slatted swine grower and finisher pens or any application where the air pattern must be changed to match the season. A unique fixed slot opening ensures a minimum airflow

Operation

The automatic spring-return baffle responds to the suction pressure in the room as set by the fans. Spring tension is adjustable with the ratchet slide and hook on the baffle. Once installed, very little ongoing maintenance is required. Each row of inlets will have to be adjusted in situ for uniform, consistent baffle opening in winter and summer. From time to time, minor adjustments may be required as conditions change.

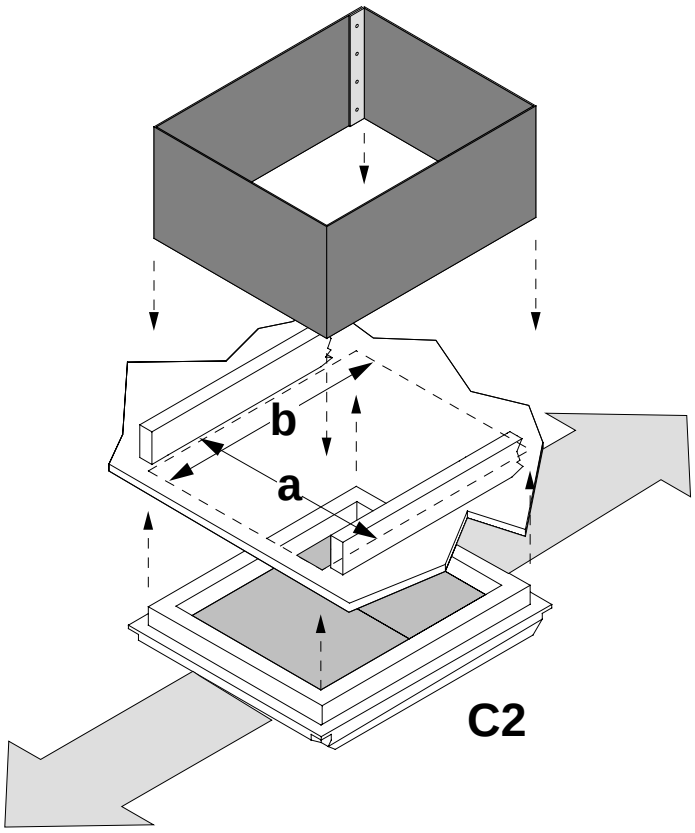

Airflow Data

Static Pressure	CFM
0.0 in H_2O	30*
0.05 in H_2O	850
0.10 in H_2O	2000

Rough Opening

Width	22	in
Length	26.5	in

Shipping Info

Package of 1

Length	28	in
Width	24	in
Height	5.5	in
Volume	2.1	ft^3
Shipping Weight (	15	lb
	6.8	) kg

☐ Box ☐ Pallet
☒ Shrink Wrap ☐ Other…

Other Info

Airflows determined at lowest spring setting. Capacity is total of both baffles. Airflow is equally split in both directions.

* capacity of fixed winter slot.

Each inlet includes a coroplast insulation stop, 13 in high to prevent attic insulation from entering the attic space.

Special Instructions

DEL-AIR SYSTEMS

Tech Spec

Item Number

500150

2000 February 3

CV1 Inlet

Application

The CV1 inlet is used as the fresh air supply in a negative pressure mechanical ventilation system. The CV-series inlet is designed to direct air across the ceiling at both low and high ventilation rates.

This is ideally suited to rooms where fresh air "dumping" is not desired and for any application where the air pattern must be changed to match the season. A unique fixed slot opening ensures a minimum airflow during winter without risk of

Operation

The automatic spring-return baffle responds to the suction pressure in the room as set by the fans. Spring tension is adjustable with the ratchet slide and hook on the baffle. Once installed, very little ongoing maintenance is required. Each row of inlets will have to be adjusted in situ for uniform, consistent baffle opening in winter and summer. From time to time, minor adjustments may be required as conditions change.

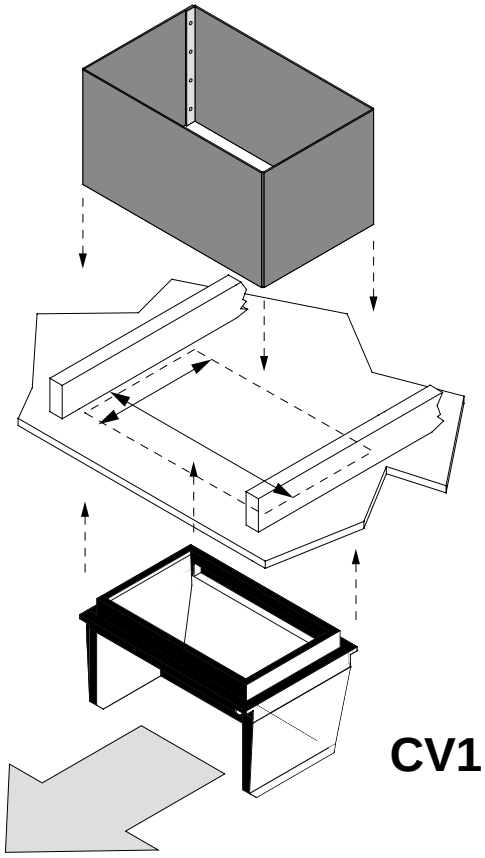

Airflow Data

Static Pressure	CFM
0.0 in H_2O	15*
0.05 in H_2O	425
0.10 in H_2O	1000

Rough Opening

Width	22	in
Length	14	in

Shipping Info

Package of 1

Length	24	in
Width	16	in
Height	14	in
Volume	3.1	ft^3
Shipping Weight (	20 / 9.1	lb) kg

☒ Box ☐ Pallet
☐ Shrink Wrap ☐ Other…

Other Info

Actual test data not available at this time. Airflows estimated from tests of R&D prototypes.

* capacity of fixed winter slot.

Each inlet includes a coroplast® insulation stop, 13 in. high to prevent attic insulation from entering the attic space.

Special Instructions

DEL-AIR SYSTEMS

Tech Spec

Item Number

500151

2000 February 3

CV2 Inlet

Application

The CV2 inlet is used as the fresh air supply in a negative pressure mechanical ventilation system. The CV-series inlet is designed to direct air across the ceiling at both low and high ventilation rates.

This is ideally suited to rooms where fresh air "dumping" is not desired and for any application where the air pattern must be changed to match the season. A unique fixed slot opening ensures a minimum airflow during winter without risk of

Operation

The automatic spring-return baffle responds to the suction pressure in the room as set by the fans. Spring tension is adjustable with the ratchet slide and hook on the baffle. Once installed, very little ongoing maintenance is required. Each row of inlets will have to be adjusted in situ for uniform, consistent baffle opening in winter and summer. From time to time, minor adjustments may be required as conditions change.

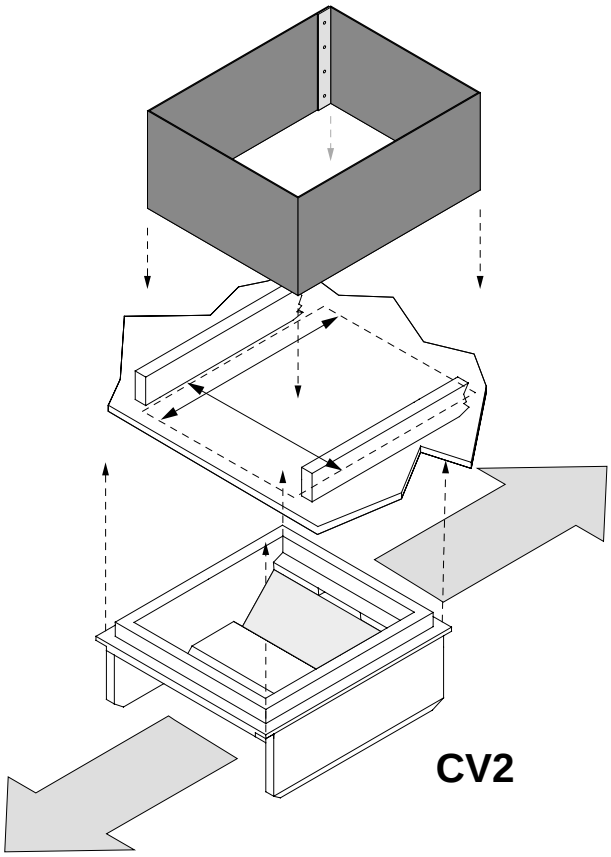

Airflow Data

Static Pressure	CFM
0.0 in H_2O	30*
0.05 in H_2O	850
0.10 in H_2O	2000

Rough Opening

Width	22	in
Length	26.5	in

Shipping Info

Package of 1

Length	28	in
Width	24	in
Height	14	in
Volume	5.4	ft^3
Shipping Weight (	25	lb
	11.4	) kg

☒ Box ☐ Pallet
☐ Shrink Wrap ☐ Other…

Other Info

Actual test data not available at this time. Numbers shown were estimates based on tests of R&D prototypes.

Capacity is total of both baffles. Airflow is eaqually split in both directions.

* capacity of fixed winter slot.

Each inlet includes a coroplast® insulation stop, 13 in. high to prevent attic insulation from entering the attic space.

Special Instructions